Type 2 Grate Inlet

Grates Conform to WSDOT Standard Plan B-4b
Inlet Conforms to WSDOT Standard Plan B-4c
Constructed in Accordance with ASTM C-478

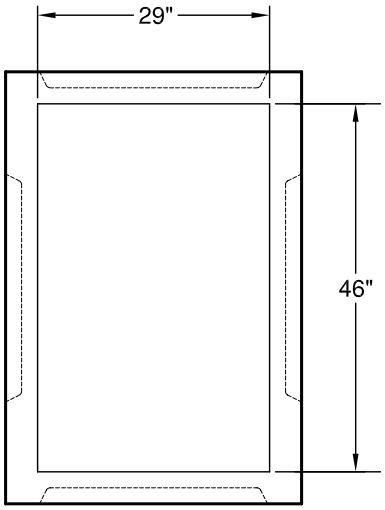

PLAN

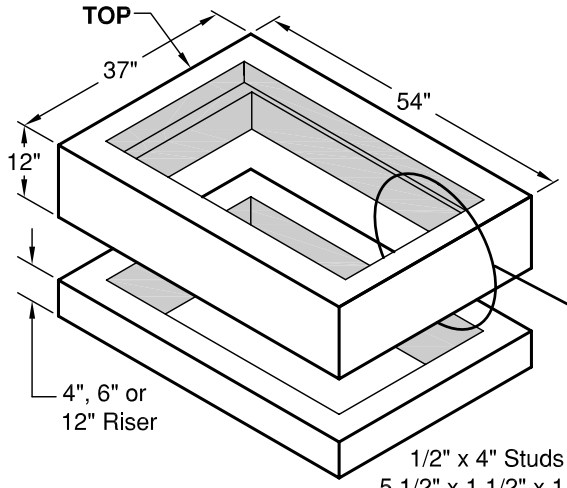

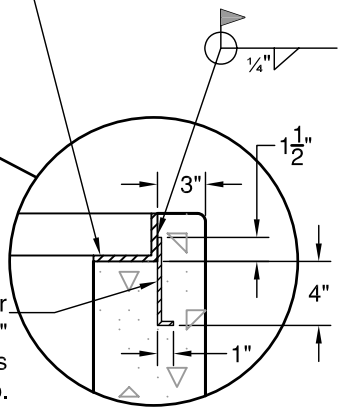

DETAIL

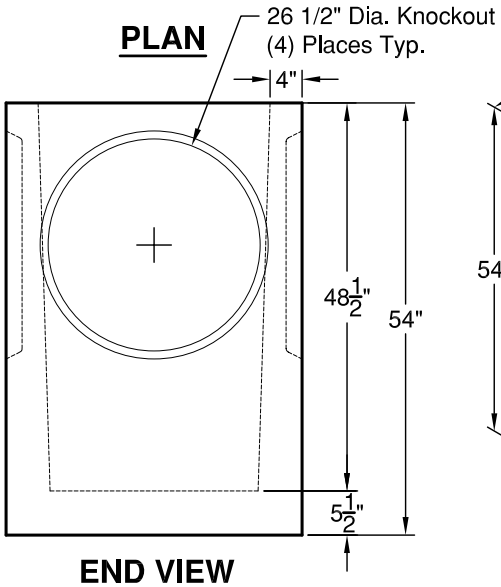

END VIEW

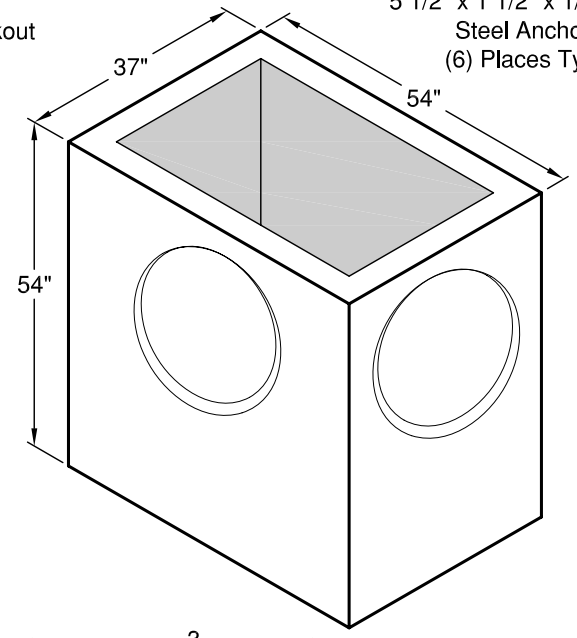

WEIGHTS:

BASE:	3,800 lbs
4" RISER:	285 lbs
6" RISER:	425 lbs
12" RISER:	850 lbs
12" TOP w/ ANGLES:	1,060 lbs
GRATES:	(SEE BELOW)

CONCRETE:
Fc= 4,000 psi @ 28 Days

REINFORCING STEEL:
Rebar: ASTM A615 Grade 60

PIPE PENETRATIONS:
Standard Knockouts all Sides

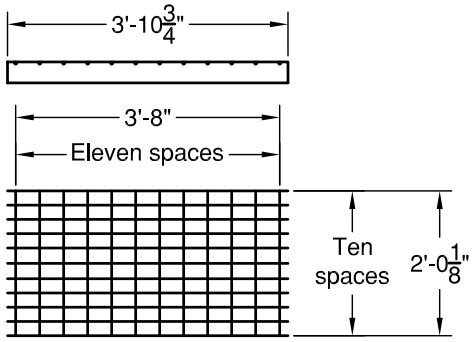

TYPE A GRATE
(Weight approximately 200 lbs)

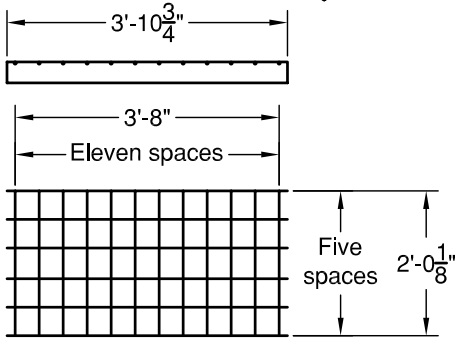

TYPE B GRATE
(Weight approximately 200 lbs)

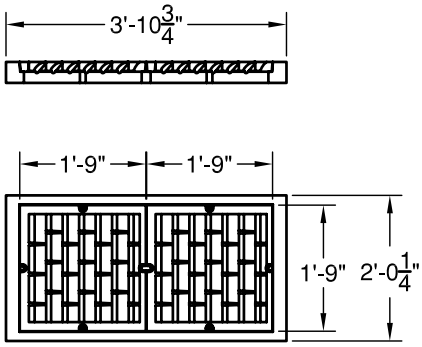

DUAL VANED GRATE
(Weight approximately 500 lbs)

GRANITE™ PRECASTING & CONCRETE INC.
4116 BAKERVIEW SPUR • BELLINGHAM, WA 98226 • (360) 671-2251 • 1-800-808-2251 • FAX: (360) 671-0780